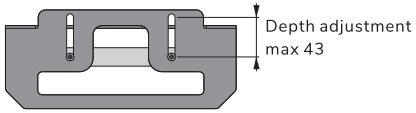

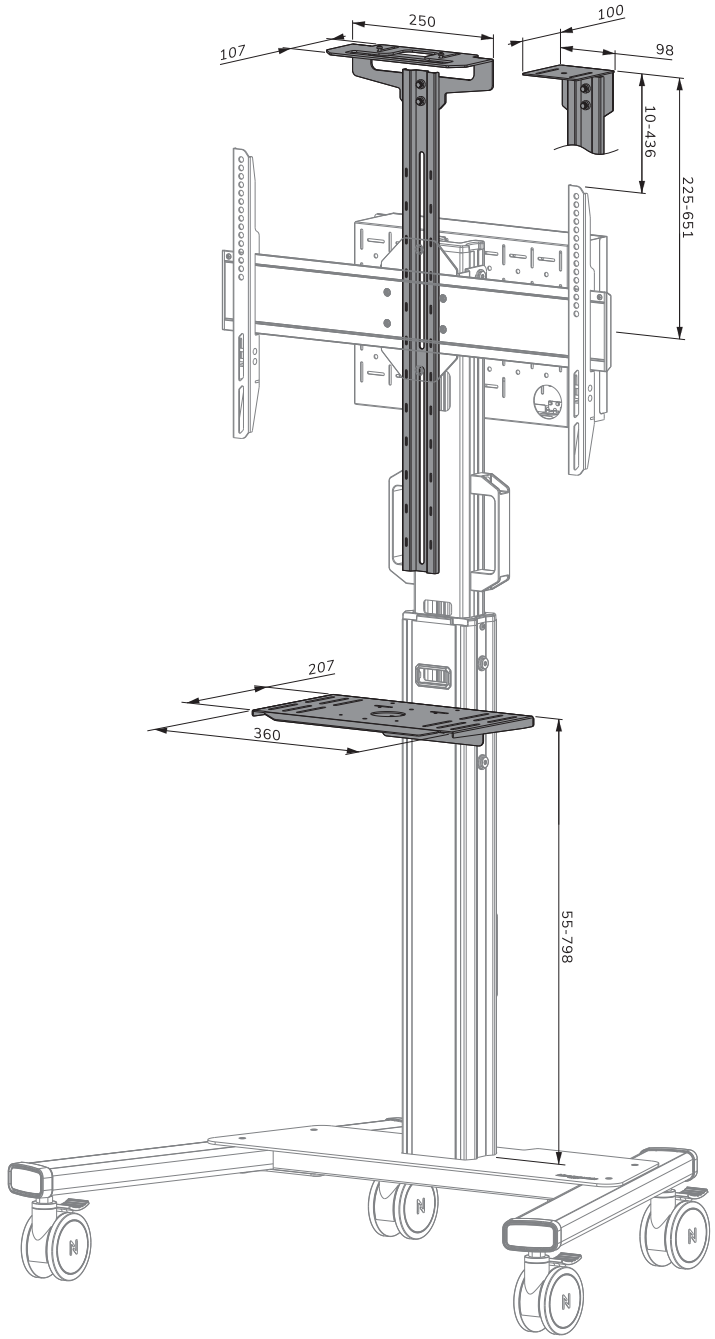

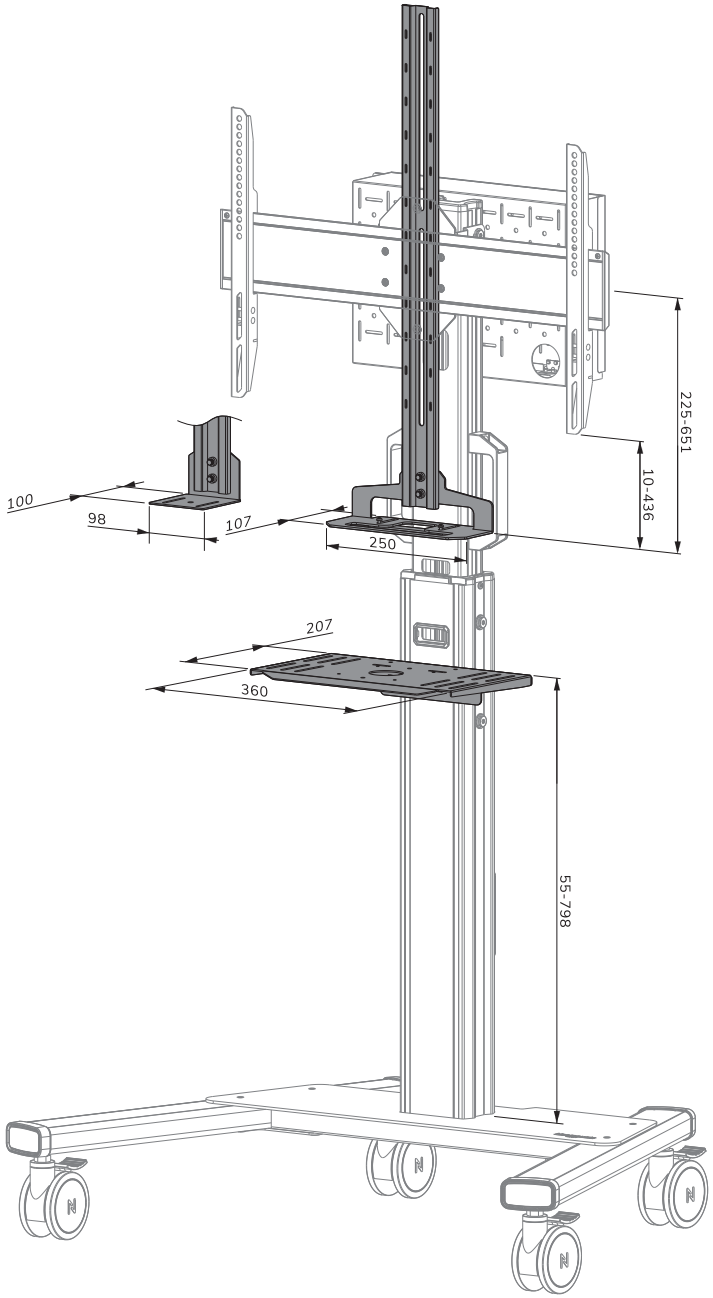

Neomounts

Measuring unit: mm

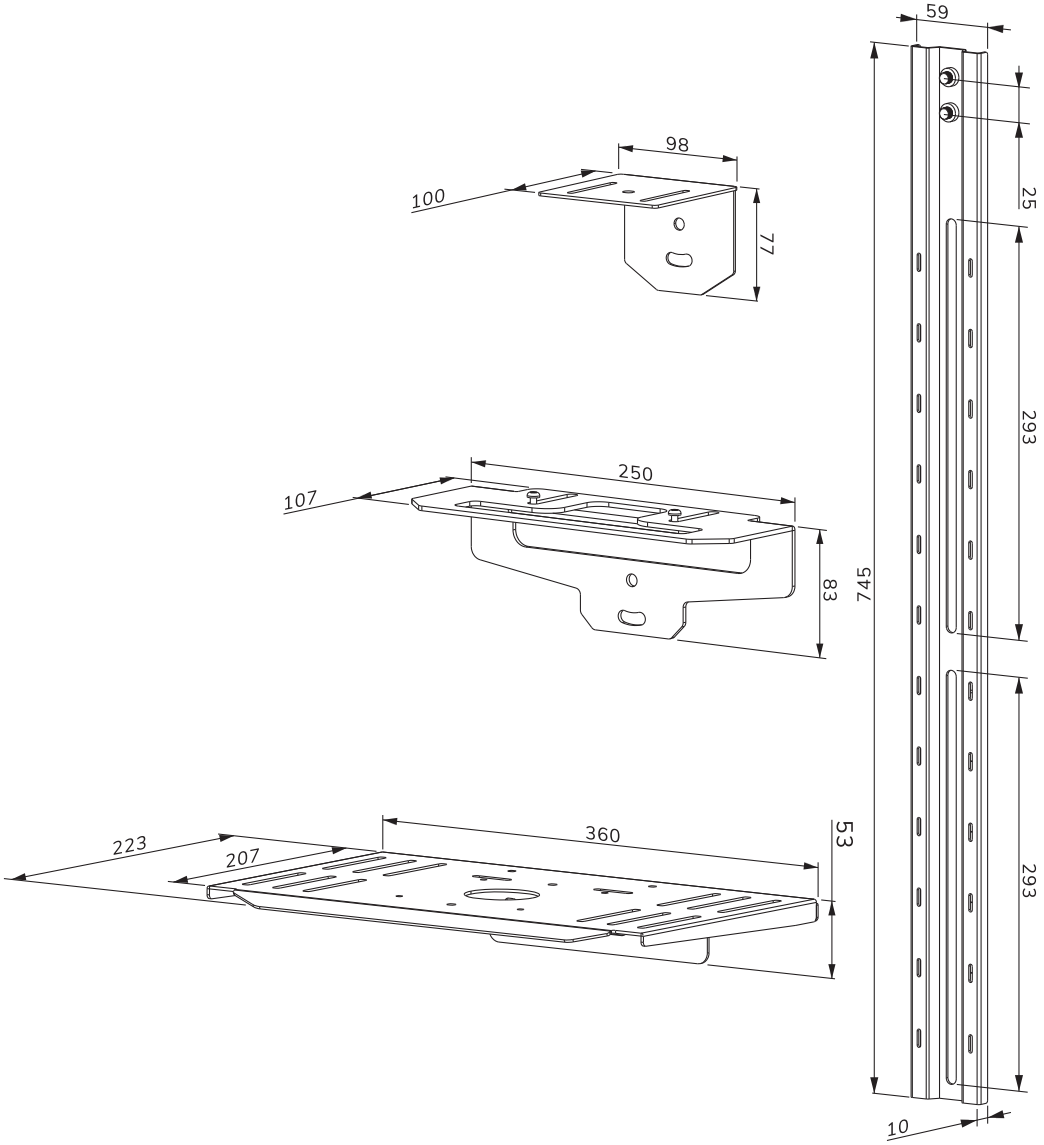

Measuring unit: mm

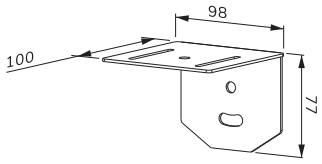
98
100
77

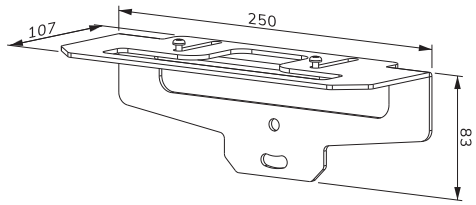
107
250
83

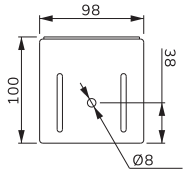
98
100
38
Ø8

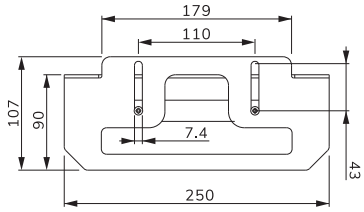
179
110
107
90
7.4
43
250

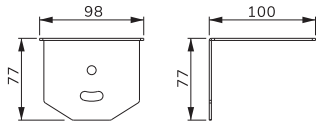
98
100
77
77

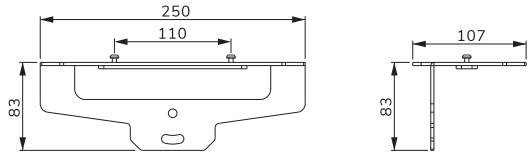
250
110
83
107
83

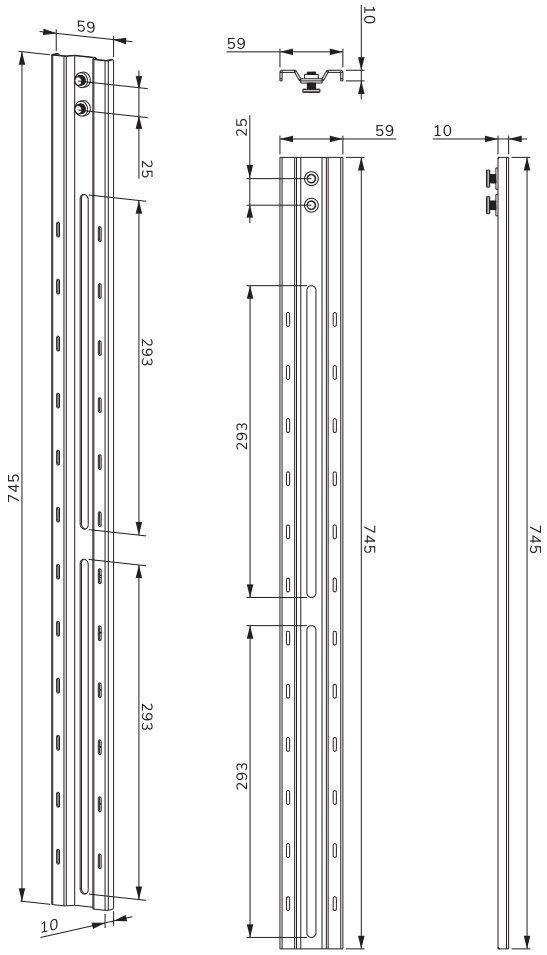
59
25
293
745
293
10
59
10
25
59
293
745
293
10
745

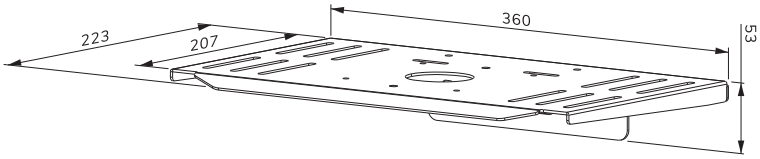
223
207
360
53

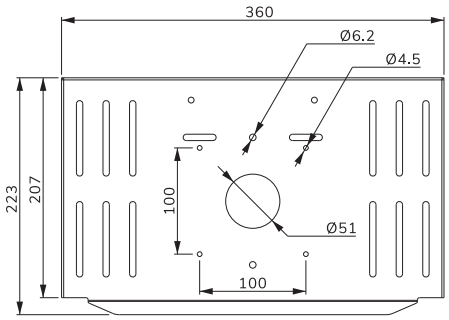
360
Ø6.2
Ø4.5
223
207
100
Ø51
100

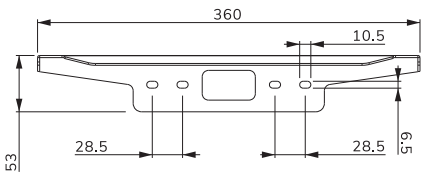
360
10.5
53
28.5
28.5
6.5

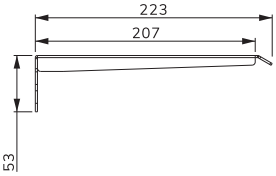
223
207
53